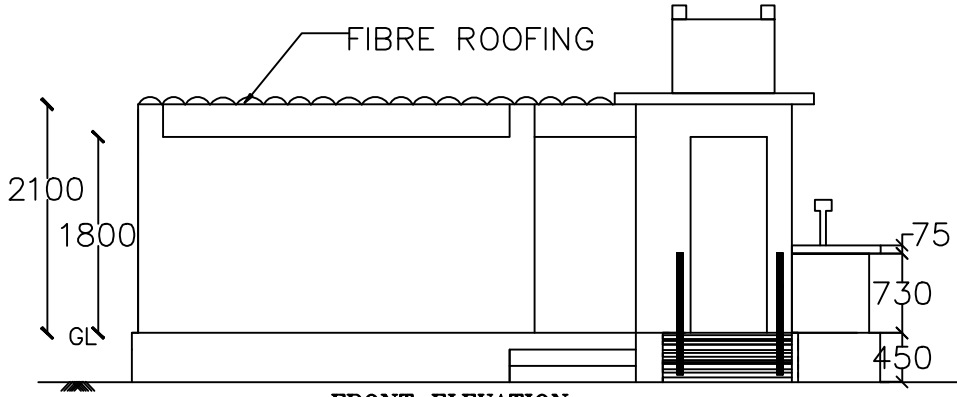


FRONT ELEVATION

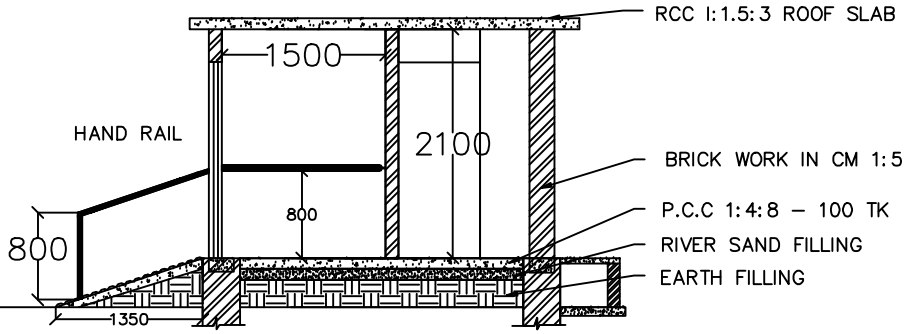


SECTION 'AA'

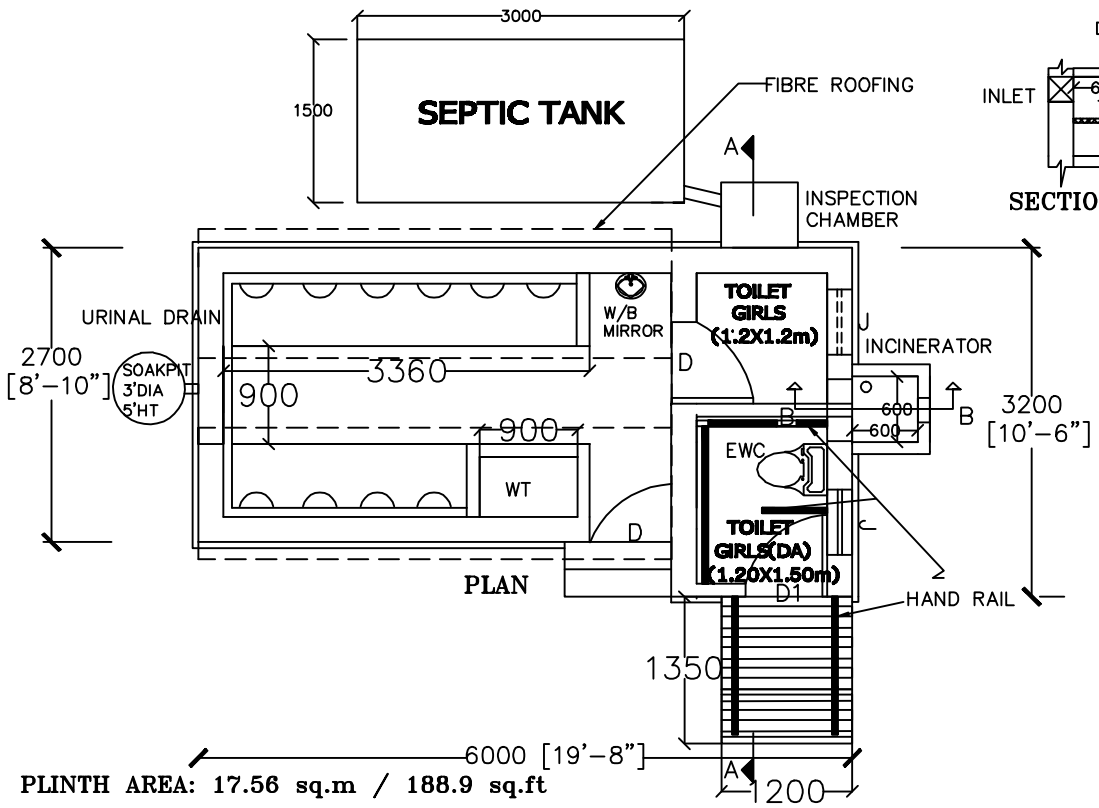


PLAN

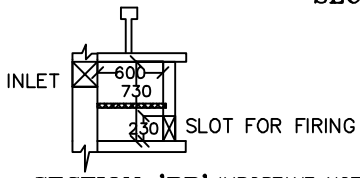


SECTION 'BB'

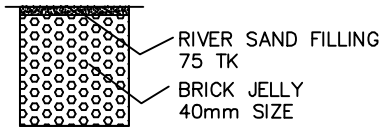


SOAK PIT SECTION

IMPORTANT NOTES:

1. ECONOMICAL FOUNDATION MAY BE ADOPTED. DEPTH OF FOUNDATION SHOULD BE BASED ON THE SOIL CONDITION AT SITE.
2. FLOORING SHOULD BE DONE USING ANTI SKID TILES FOR TOILETS ONLY.
3. SLIGHT SLOPE SHOULD BE GIVEN FOR ROOF SLAB
4. HANDRAILS SHOULD BE PROVIDED INSIDE THE TOILET AND AT THE RAMP PORTION FOR DIFFERENTLY ABLED STUDENTS.
5. FIBRE ROOFING HAS TO BE PROVIDED ONLY IF THERE IS ANY BUILDING NEAR BY.
6. SURFACE OF THE RAMP SHOULD BE GROOVED.
7. PVC TANK WITH 500 LITRES CAPACITY SHOULD BE PROVIDED.
8. DOOR (FOR DA TOILET) SHOULD BE PROVIDED WITH HANDRAIL.

**PLINTH AREA: 17.56 sq.m / 188.9 sq.ft**

## SCHEDULE OF JOINERY

| SL. NO. | TYPE | SIZE | | SILL | TOP | DESCRIPTION | REMARKS |
|---|---|---|---|---|---|---|---|
| | | WIDTH | HEIGHT | | | | |
| 1 | D | 750 | 1800 | – | 1800 | STEEL DOOR WITH 18GMS SHEET SHUTTER | SINGLE |
| 2 | D1 | 750 | 1800 | – | 1800 | STEEL DOOR WITH 18GMS SHEET SHUTTER WITH HANDRAIL | SINGLE |
| | J | 600 | 300 | 1500 | 1800 | RCC JOLLY | — |

DRAWING NO:1–J5/SERD/Dt.03.09.11

| DIRECTORATE OF RURAL DEVELOPMENT AND PANCHAYAT RAJ | | | |
|---|---|---|---|
| SCALE 1:100 | DATE; | ALL DIMENSIONS ARE IN mm. | |
| AE | AEE | JOB NO:5 | DRAWING NO:1 |
| EE | SE | | |
| TYPE DESIGN FOR SCHOOL TOILET (GIRLS) | | | |
| PLAN,ELEVATION AND SECTION | | | |